a guide to understanding a barn and planning for maintenance

Barn School

Stephen L. Stier

Step back and get the big-picture view of a barn. The identification of problem areas and issues will provide you with a basis for determining priorities and creating a plan for maintenance and repair and more.

Checklist & Photos
A thoughtfully completed checklist with companion photographs provide a basic overview of the condition of the building. Photography is the best way of documenting. Carefully photograph what you discover from this process – outside and inside the barn.

Take long-views of each elevation (side) of your barn from 20-30' away. Capture in the image the whole elevation (side to side and ground to sky). Take close-ups -- inside and outside -- of the barn that document the problems and concerns you discover. These can include: failing joints, water stain, rot, cracks across the grain, missing parts and sagged or bulging surfaces, etc.

Moisture & Maintenance
Uncontrolled moisture and deferred maintenance are the twin killers of barns. Most owners would not allow trees to grow into the foundation of homes. We would fix broken doors, holes in the roof or broken windows. Yet many barns suffer from years or decades of deferred maintenance. This allows moisture to degrade our barns. Bad drainage invites excess moisture that deteriorates foundations and rots wood members -- floors, and sills. Holes in the roof and windows bring in water to stand and rot critical barn structural members.

Investigating Possibilities

Barn School has been conceived and piloted during 2016 and 2017 as a process that any interested person can use to investigate and assess the condition and needs of a barn.

With training and a completed assessment you will have gained a better understanding of your barn. This can be a basis for prioritizing needs and forming a plan for repairs, rehabilitation and preservation into the future. This process will also give you confidence and a basis for discussions with contractors.

Barns 101 • Vocabulary, Parts and History

First, so we are all on the same page, it is important to understand the history, the vocabulary, and the structure of Michigan barns. Here are some of the basics.

History

Before Michigan was settled, the timber framing that was used along the East Coast in Colonial times and post-Revolutionary war times were a carry-over from European timber framing. These early American barns had three distinct features that early Michigan barns do not have: the Scribe rule layout, the English tying joint, and the Principal rafter system.

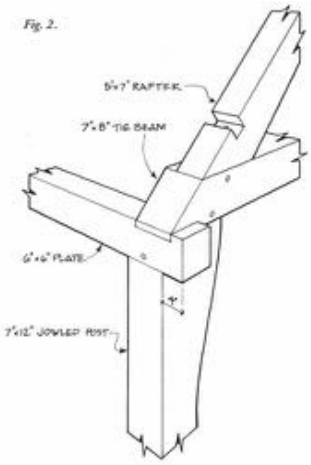

English timber frame and tying joint illustrations by Jack A. Sobon from Historic American Timber Joinery. Permissions to use are pending.

Immigration to Michigan from other places in North America began in large numbers in 1825 with the opening of Erie Canal. It is important to note that the vast majority of these Michigan Pioneers came from other farming states e.g. Vermont, New Hampshire, New York and Canada.

They were for the most part already farmers and came to Michigan for the prospect of better farming opportunities -- more land, and better soil. These farmers considered themselves Americans. They were 1 or 2 generations away from emigrate families from European countries. For these reasons, it is my theory that there is very little evidence in barn style and construction that have any ethnic characteristics. These Michigan immigrants built American barns. Exceptions to this are the emigrates who came directly from the European homeland, such as the Dutch, who came directly to the Holland, MI area and Finnish who immigrated to Michigan's Upper Peninsula.

Moving to an American barn

By the time that pioneers came to Michigan developments had occurred that modernized Michigan's timber frame barns. The steel framing square, developed in the first quarter of the 19th century, allowed a standardization of construction features not possible before this time. In these American barns two consistent standards of measurements emerged:

- a 2" measurement for laying out the mortise & tenon joints and
- the use of a 45 degree diagonal bracing at 3' legs.

Early Michigan barns were mostly hand hewn, fairly small timber frame structures that were built on grade with a gable roof. This small, 3-bay barn was often about 20' x 30'. As the need arose, barns were increased in size in a variety of ways: setting them on a basement (adding another level), building shed roof lean-tos, and/or by increasing the size or the number of bays.

A transition to plank frame barns began around the turn of the 20th century as farmers began to look towards conserving labor and materials. Instead of large timber posts and beams with wood pins holding them together, plank frame barns were built of 2" thick planks and nailed together.

A Midwestern agricultural engineer, John Shawver, was an early proponent of plank frame barns. He is also credited with inventing the "Shawver truss system" for supporting roofs. This truss system offered more clear span and with it the ability to store more loose hay in the mow.

Gambrel roofs came into being at the turn of the 20th century. A common explanation for the popularity of the gambrel roof is that farmers were putting up more loose hay and believed that this shape change would offer them more useable space. Around this time, a significant amount of barns (10 – 20%) were changed from a gable to a gambrel roof.

The heavy timber frame transitioned to become 2" planks cut in a sawmill. Sawn planks replaced large timbers, pole rafters and wall girts. From the outside of the barn you cannot typically tell if it is a timber frame or a plank frame barn. Plank frame barns continued to take over from timber frames through the depression. After WWII pole frame barns became popular because they were cheap and easy to erect.

Round barns and round or curved roof barns have both similar and different framing structures.

Structure and Vocabulary

Barn Vocabulary

Bent – The structural posts and beams that form a cross section of the barn. The typical 3-bay barn has 4 bents.

Bay – space between the bents

Roof shapes

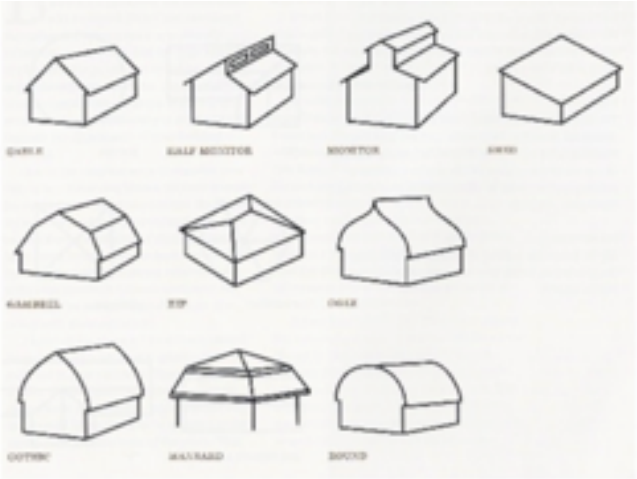

Illustration from Michigan Barn and Farmstead Survey by Steve Stier.

Foundation Types

On grade – Built at ground level with no ramp. Barn doors are at grade level

Piers or boulders elevate the sill of the building a few inches to feet above the ground.

Raised and ramped – Raised foundations were built on grade but with a distinct lower level or basement. The upper floor usually has a built earthen ramp that allows access.

Bank – Built into a hillside, allowing access to a lower level on the downhill side and upper level above

Bridged – Built with a ramp that is hollow under the portion next to the foundation.

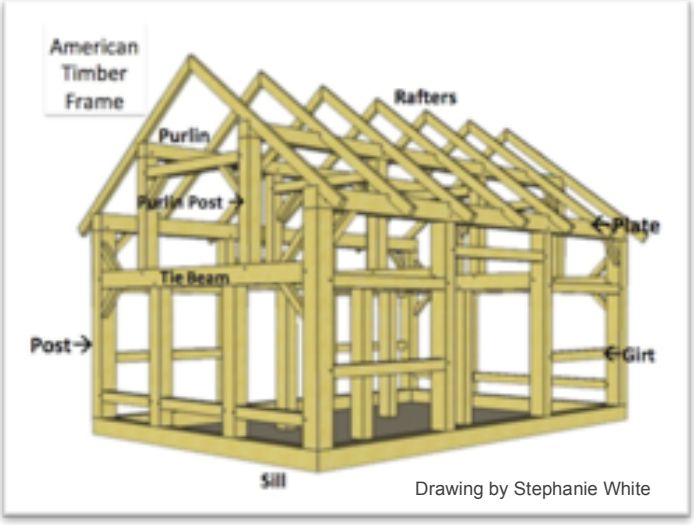

Materials Identification

Roof Coverings:

Shingles: wood, slate, or asphalt

Steel: corrugated, ribbed, or standing seam

Siding:

Wood vertical boards, v-grove siding, board and batten; and horizontal siding

Foundation:

Boulders; field stone (plain, split or dressed), rubble; poured concrete; glazed tile, concrete block

On-site Review and Documentation

Looking at and Documenting the Barn

With this checklist and your camera in hand, set out to carefully observe and review the barn through this process. Observe and record -- through notes and photographs -- the materials and general conditions that you see.

Based upon your own judgment, use a basic scale of "*good,*" "*fair,*" and "*poor*" as it relates to the joinery, surfaces, and parts of the barn. This will provide a basis of understanding consistent with your own judgment and experience. Trust yourself. This process will give you a basic understanding about what is going on with this building.

EXTERIOR four elevations -- north, south, east, west

Elevations Observe the whole barn by looking carefully at each elevation from about 20-30' away. An elevation is the outside view of the 2 sides and 2 ends of the building. Use the scale: good, fair and poor, with notes and photographs to record your observations, opinions and to document what you are seeing.

Straightness Notice ridgeline and eave line and look at the corners of the barn. Are they all straight and plumb (vertical -- straight up and down)? Are they leaning? Is there any sagging or bulging present?

As you walk up to the barn, let your eyes scan across the flatness of the roof. On a gable roof there is one flat plane or pitch on each side. On a gambrel roof there are two flat plains or pitches on each side of the roof. Notice how straight the fold of the gambrel is. These observations of straightness provide evidence of structural stability or potential problems with the framing inside.

Vegetation Check the presence of vegetation – shrubs, trees, plant matter -- within 10 feet of and/or overhanging the barn.

Drainage Is there "*positive drainage*" possible all around the barn? Does the ground slope away from the barn for at least 6' on all elevations? Is it possible to grade the ground so that this exists? What interferes with this?

Exterior Surfaces & Condition

- Identify the foundation material and condition
- Identify the roof material and condition
- Identify siding material and siding condition
- Identify doors, windows and trim condition

The Sill Try to observe the condition of the sill. If there are gaps between the siding, at the top of the foundation, this is an opportunity to assess the condition of the sill. Try poking a pocketknife into the wood between the siding boards. If your knife goes into the wood, even 1" easily, this signifies rot. Record how far your knife penetrates easily. It may be rotted on the outside but not on the inside of the barn. A sill is typically an 8" x 8" timber upon which posts sit. This serves as a surface to nail the exterior siding to.

On-site Review and Documentation *continued*

INTERIOR Walk into the barn on the main floor.

Joints in General Look at the mortise & tenon joints between the tie beams and posts to be sure they are not pulled apart. Then look at the ends of the tie beams at the corner posts to be sure they are not pulled apart.

Braces -- diagonal supports in the barn. They are often 45 degrees, angled between a post and beam. Look for missing bracing indicated by empty mortises.

Diagonal Braces, Plates & Purlins Look at each end of each structural member for general condition and note if condition is sagged, broken, rotted, or missing; and identify irregularities and deterioration.

Plate the beam at the top of the front and back walls of the barn that supports the rafters. Look to identify if these are in good condition. Is there a presence of dark water stains, obvious rot, broken, sagged or missing parts, etc.

Checks Cracks appearing in timbers that run parallel with the grain of the timbers *do not affect the structural capacity*. Cracks that run across the grain of the timber *indicate structural problems*; note these if they occur.

Rafters are the framing members that support the roof. They extend from the plate to the peak of the roof. Rafters may be poles (small trees flattened on the top), or sawn planks. Poles may even have bark on them.

Roof sheathing are the boards which you can see from inside the barn. These are the bottom side of the roof upon which the roofing material is anchored. Observe the sheathing to discover if there are dark stains. This could indicate the roofing has leaked.

Hay carrier track Is a hay carrier track suspended at the peak of the roof? This may be a wood or iron track. There may be a hay car or other hay carrying equipment still suspended from the track.

BASEMENT Go there for final inspection review.

Sill In most cases the condition of the sill cannot be seen well from the outside of the barn, but from the basement you can look up and observe the inside surface of the sill beams on each of the 4 sides of the barn. Check the condition visually and if suspect (dark stains, coarse or absent areas of wood) use your pocket knife to test the quality of the wood. If your knife enters the wood easily more than 1/8" it is probably compromised. Identify particular areas of rot for further investigation.

Floor support timbers and posts The posts in the basement hold up the support beams; the support beams hold up the floor joists, and the joist supports the floor boards above. Look for rot, cracks, and broken members. Is there rot at the bottom of posts? Are there sagged or broken beams.

Powder-Post Beetles Look for tiny holes and white or tan dust trails on posts and beams. This may signify the presence of Powder Post beetles. Beetles typically do not destroy structural members unless it is a severe infestation. Power Post beetles can be controlled with applications of borax and water.

Exterior Ornamentation

Cupola, ventilator, lighting rods, painted trim and designs, cut-out designs, and ornamental trim.

Note these elements and their condition and photograph them.

[illegible]	[illegible]								
Date:									
Course Name:				[illegible]					
Room Name:									
Room Type					Roof Type				
Roof Surface	Pressed tiles	Pressed tiles	Slate		Tiles	Pressed	Slate	Pressed	Slate
[illegible]		[illegible]	[illegible]	[illegible]	[illegible]	[illegible]			
Organization									
Drainage									
Foundation material									
Foundation condition									
Wall thickness									
Wall [illegible]									
Floor material									
Floor condition									
Wall displacement									
Ceiling condition									
Capacity condition									
Door condition									
Gutter									
Downspouts									
Siding material									
Siding condition									
Doors									
Windows									
Trim									
[illegible]		[illegible]	[illegible]	[illegible]	[illegible]	[illegible]			
Circle one									
Number Missing or Repair Needed									
Brace									
Pipes									
Tie Beams									
Rafter									
Joists to gusset									
Wall sheathing									
Wall bracing/Tab									
Gables									
Dormer									
Ridge Vents/Tiles									

[illegible]						
[illegible]						
[illegible]						
[illegible]						
Interior walls						
[illegible]						
[illegible]						
[illegible]						
[illegible]						
[illegible]						
[illegible]						
[illegible]						
[illegible]						
[illegible]						
[illegible]		**[illegible]**	**[illegible]**	**[illegible]**	**[illegible]**	**NOTES**
Foundation or crawl space?						
[illegible]						
[illegible]						
[illegible]						
[illegible]						
[illegible]						
[illegible]						
[illegible]						
[illegible]						
[illegible]						
[illegible]						
[illegible]						
[illegible]						

[illegible]

NOTES

Photo by Kelly Rundle, Fourth Wall Films.

Steve Stier is a licensed builder and Historic Preservationist who works with traditional building methods and materials. He consults with owners of elderly buildings and has repaired, moved and restored traditional barns and historic buildings. An educator, Steve has taught timber frame building classes and led workshops teaching barn owners solutions for problems of their barns. Steve has extensive experience in restoration and renovation of many types of historic structures along with specialized study and experience in repairing, restoring and moving traditional barns.

Steve is a "student of barns" who has combined on-the-job learning with academic study. He holds Masters Degrees in Historic Preservation (Eastern Michigan University, 2000) and in Industrial Arts Education (Western Michigan University 1974).

A founding member of the Michigan Barn Preservation Network, Steve is Vice President and Chair of the Technical Committee.

As a board member of the Michigan Historic Preservation Network, he developed hands-on training programs for owners and most recently coordinated a 9 week intensive Living Trades Academy focusing on traditional building crafts and historic preservation in inner city Detroit.

Contact Steve Stier at
stephenstier@gmail.com

Michigan Barn Preservation Network

Michigan Barn Preservation Network is an active Michigan 501(c)3 nonprofit organization of barn owners and enthusiasts. We believe that barns are economic resources, symbols of our agriculture heritage, and icons of our American character.

MBPN fosters the sharing of barn experiences; hosts annual conferences, tours and hands-on workshops; publishes a regular newsletter; recognizes barn rehabilitation and education successes; helps to identify speakers for programs; and identifies and shares rehabilitation information on traditional barns.

The Michigan Barn Preservation Network is an all volunteer organization committed to the rehabilitation of traditional barns for agricultural, commercial, residential, and public uses. Our work raises awareness and aids in the continuing presence of barns in our communities and on the landscape.

MBPN strategic planning has identified our **VISION for the future:**

- **MBPN is making a difference in the preservation of Michigan barns.**
- **Individuals and communities are engaged in barn preservation, and**
- **MBPN is considered to be the 'go-to' resource about traditional barns.**

MICHIGAN BARN PRESERVATION NETWORK

Special thanks to MBPN board members Tammis Donaldson and Julie Avery for assistance in the development of Barn School and this booklet; to Sarah Bearup-Neal and Keith Kehlbeck for their editorial review; and to Stephanie White for the measured drawings on pg. 4 and back cover.

BARN SCHOOL is a pilot project held at the 2018 annual conference of the Michigan Barn Preservation Network.